Expt. No. 1`: sampling using Sample and hold circuit

AIM: - To study the working of Flat top sampling using Sample and hold circuit.

Components: - IC LF398, Voltage source for opamp, resistors, capacitors

Modulation Circuit Diagram:

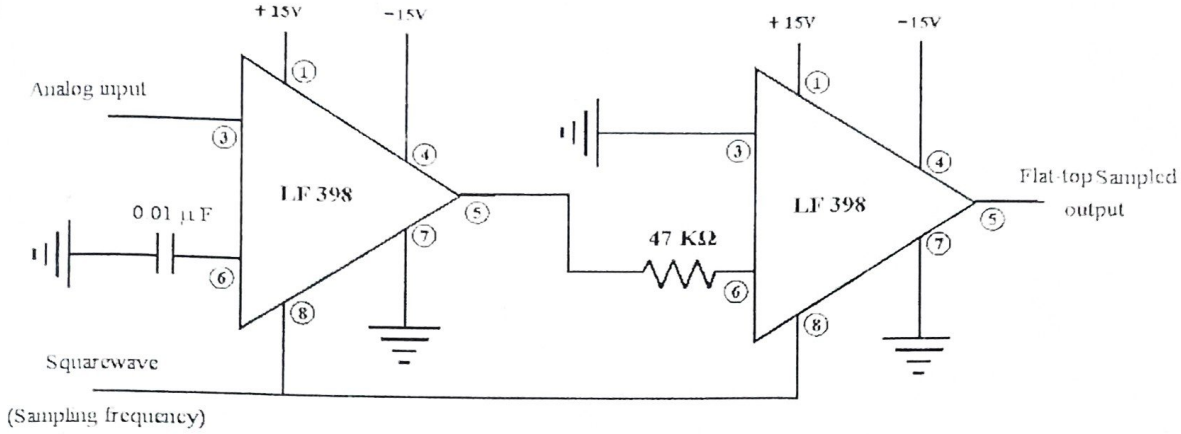

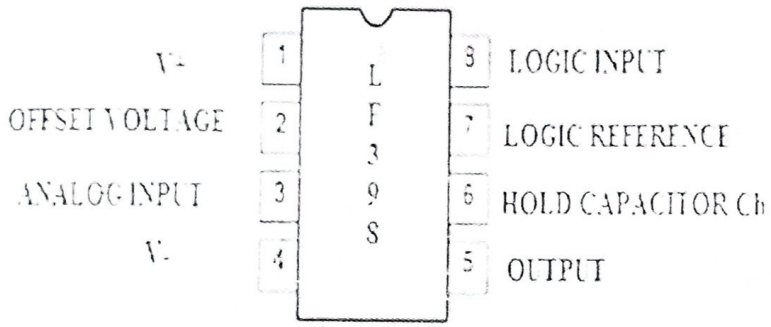

PROCEDURE:

1. Connect the circuit as shown in the figure with dual power source connected to respective pins of LF398 IC.
2. Apply the ~~sampling~~ sine signal ~~square~~ wave of 400Hz, 4V and ~~analog~~ square input of 1Khz, 4V (change to 8v, 3KHz and observe)
3. Observe the flattop sampled signal on CRO

Observations:

with CD4051 (TDM)

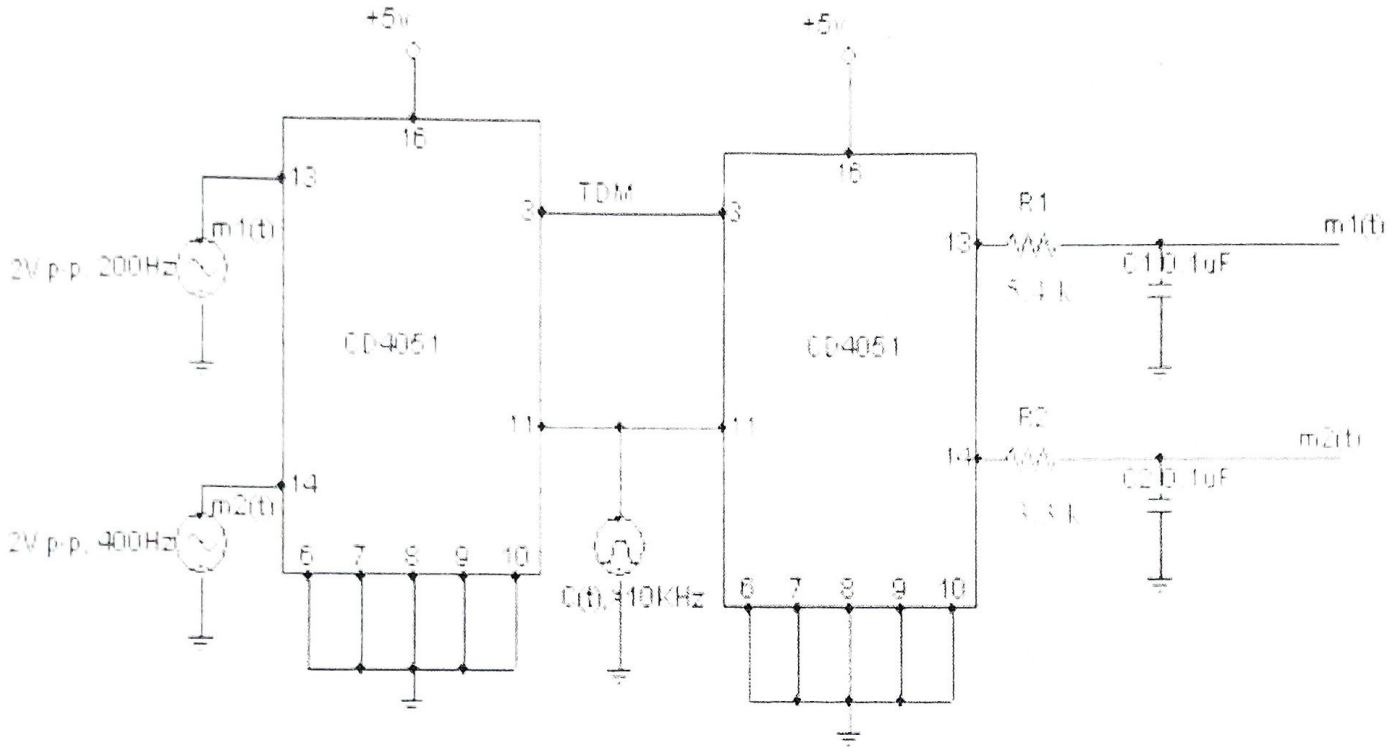

Expt. No. 2: Amplitude Shift keying

AIM: - To study the working of an Amplitude Shift keying generator and detector.
Components: - LF398 IC, Resistors as per design BY127, 1μF, IC741, 10kΩ potentiometer

Modulation Circuit Diagram:

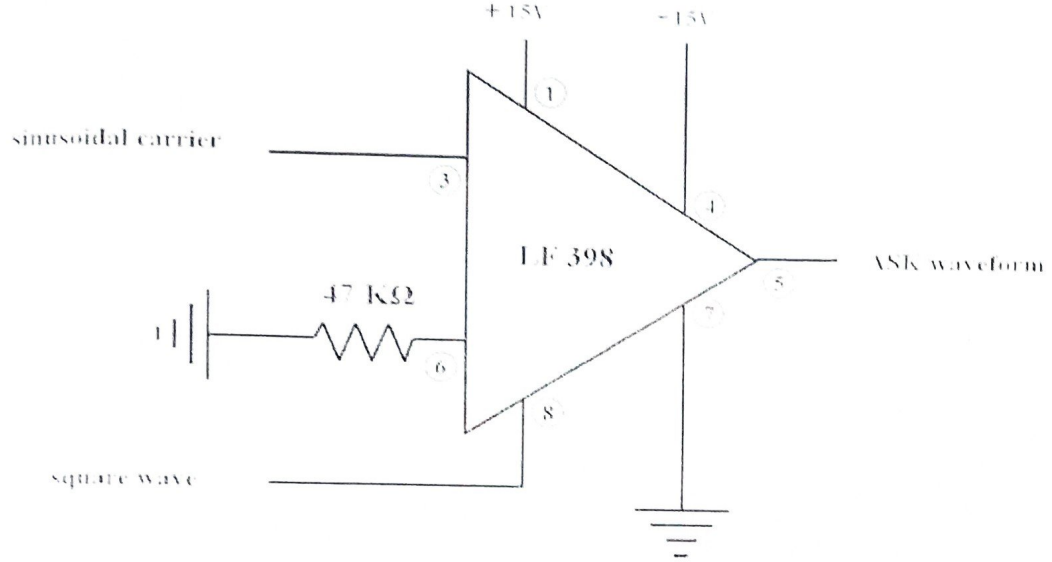

PROCEDURE:

1. Connect the circuit as shown in the figure.
2. Apply the input sinusoidal voltage m (t) as 500Hz. Apply carrier square pulse as 1 kHz.
3. Observe the waveforms for ASK.
4. Use the demodulation circuit to obtain m (t) back.
5. The binary data is recovered from the ASK waveform using a LPF followed by a Schmitt trigger.

Waveforms:

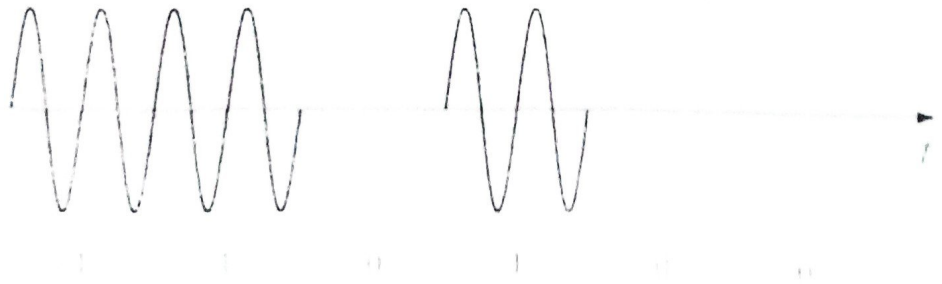

SchmittTrigger:

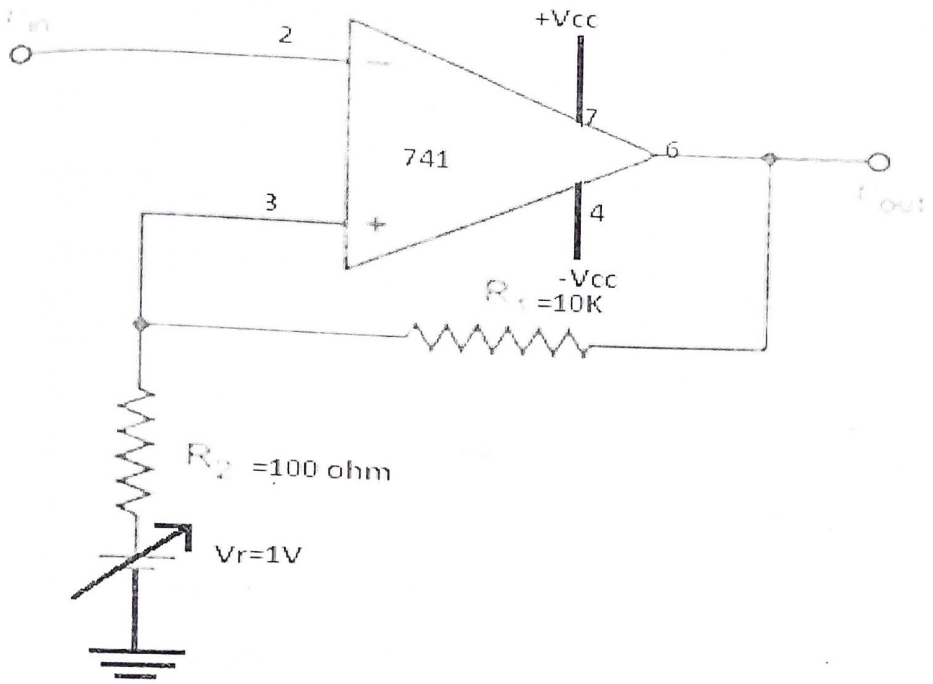

Demodulator

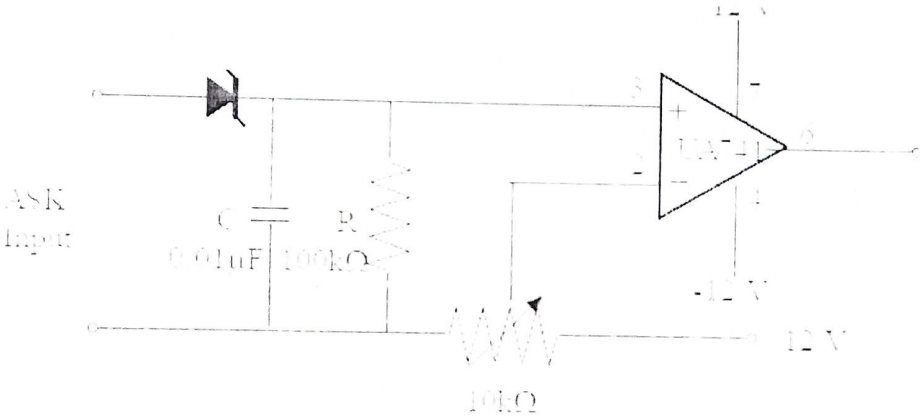

Design

filter with Values for R and C for message frequency

F=1/2πRC

$\tau = RC$
$= 1$

$\frac{1}{f_m} \geq \tau > \frac{1}{f_c}$

Observations

Expt No 3. BFSK Generation and Detection:

AIM: - To study the working of an Frequency Shift keying generator and detector.
Components: - LF398 IC, Resistors as per design BY127, 1μF, IC741, 10kΩ potentiometer

PROCEDURE:

1. Connect the circuit as shown in the figure.
2. Apply the input voltage c_1 (t) at 50 KHz and c_2(t) at 100 KHz. Apply binary data at 1 kHz.
3. Observe the waveforms of FSK and spectrum on VSA
4. Use the demodulation circuit to obtain binary data back (vary the 10 K potentiometer in the demodulation circuit to get the desired output).

Modulation Circuit Diagram:

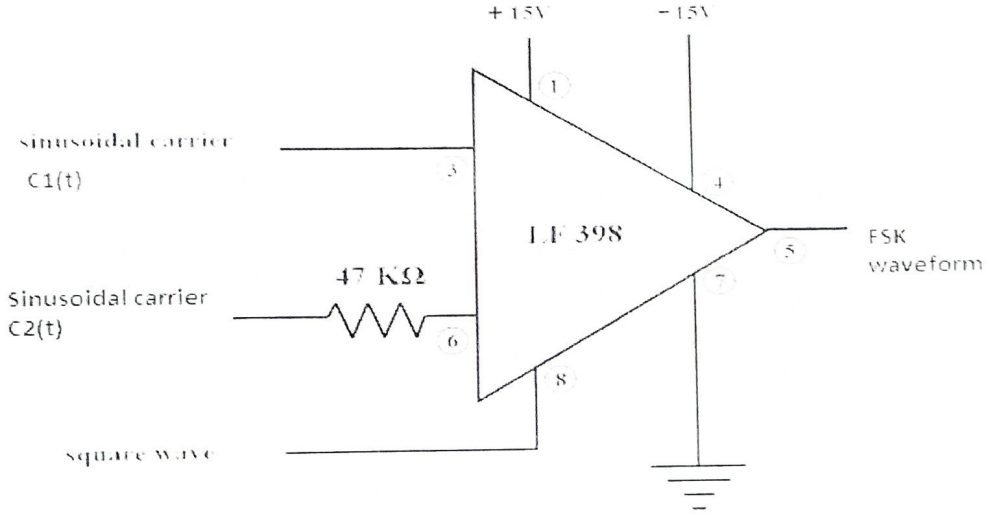

Waveform

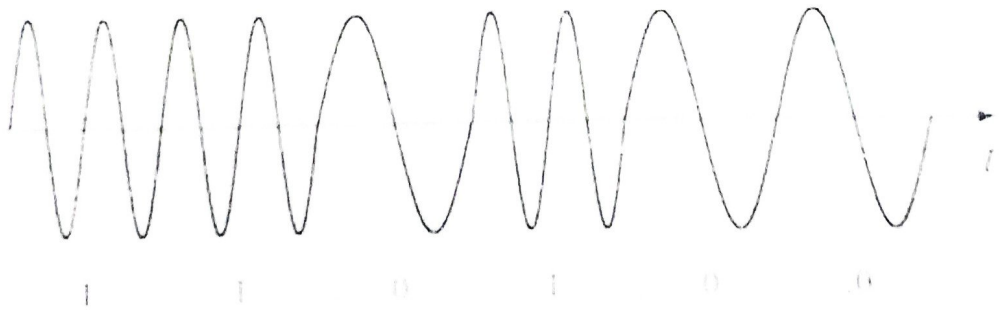

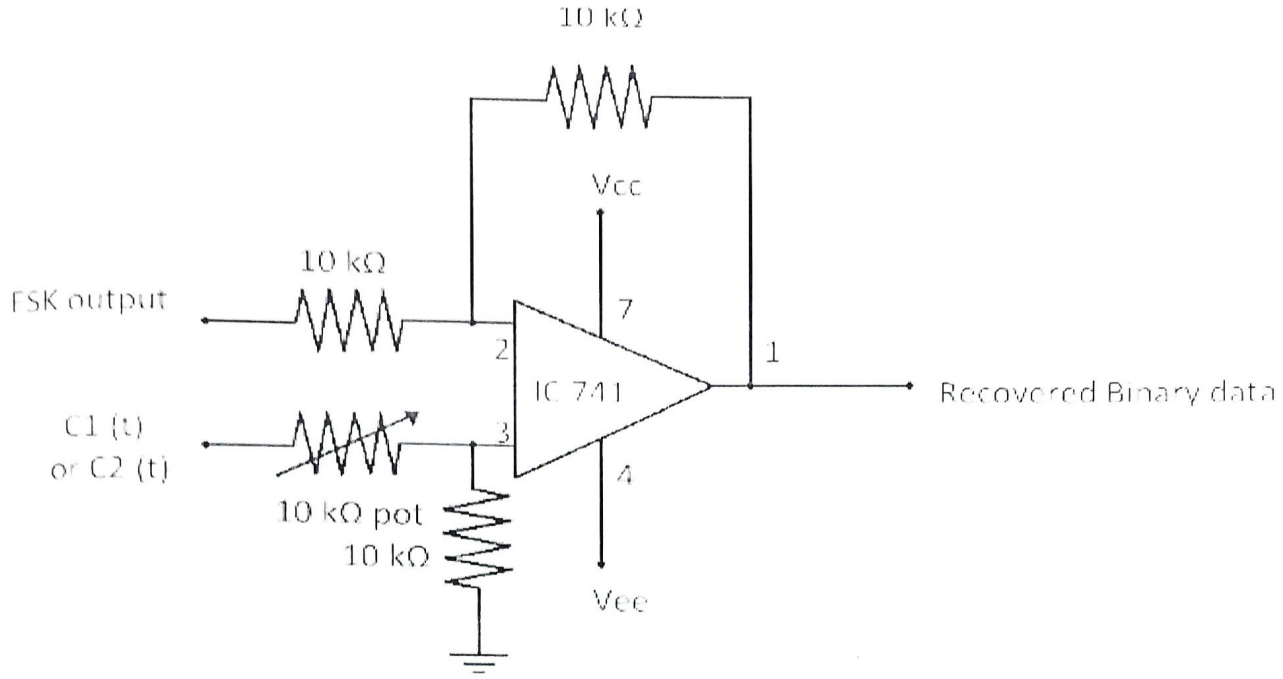

Demodulation Circuit Diagram:

DESIGN:

Observation

Expt. No.4. BPSK generation and detection

Aim: To study the working of a Binary phase Shift keying generator and detector.

Components Required: LF 398, IC741, centre tap transformer, 47 KΩ, 10 KΩ, 10 KΩ potentiometer.

Modulation: Circuit Diagram:

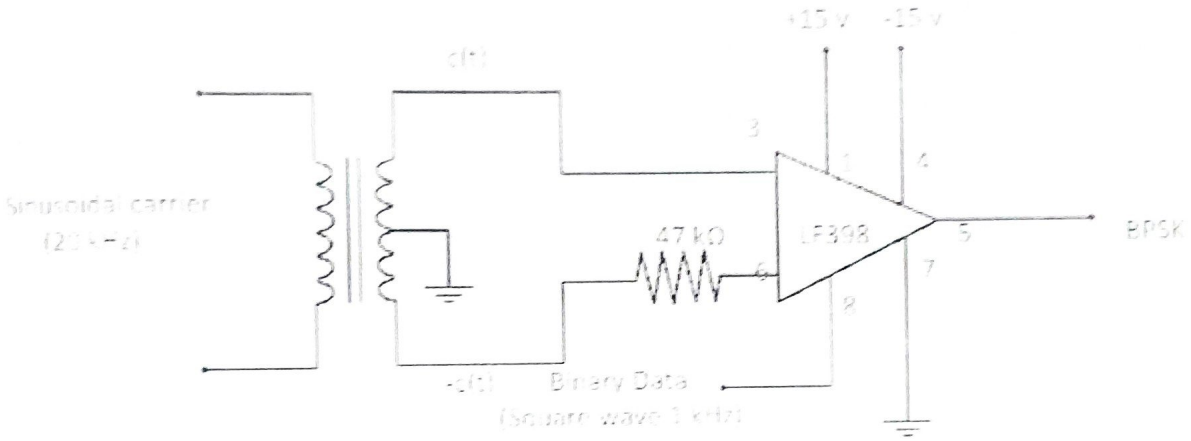

PROCEDURE:

1. Connect the circuit as shown in the figure.
2. Apply the input voltage c (t) at 20 KHz. Apply binary data at 1 kHz.
3. Observe the waveforms for BPSK.
4. Use the demodulation circuit to obtain binary data back.

DESIGN:

Waveforms:

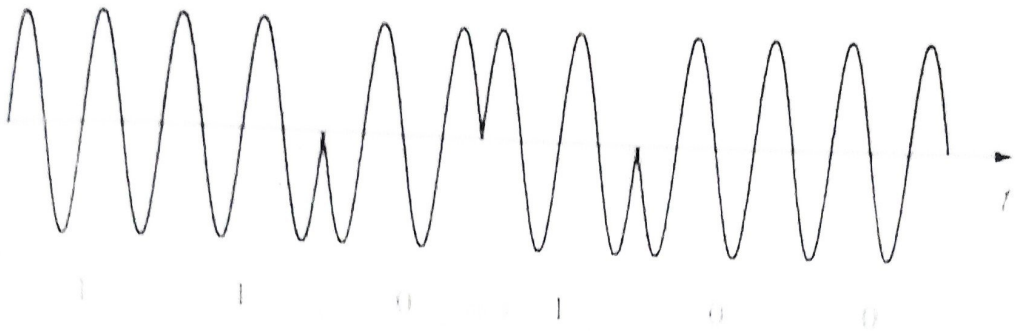

DEMODULATION:

Circuit Diagram:

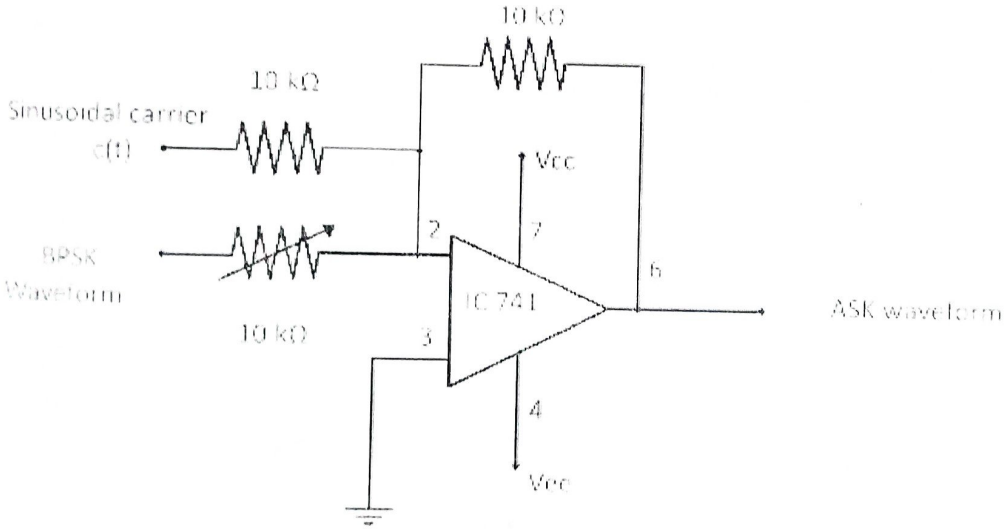

Observations